GELCOAT shower bases

white | biscuit | bone

G 4232 SH PAN 42" x 32" x 6"

Gelcoat shower base with EasyStep™ 5" threshold.

HANDED	center drain
WEIGHT	56
CODES	IPC, UPC, ANSI Z 124.2

TOP VIEW

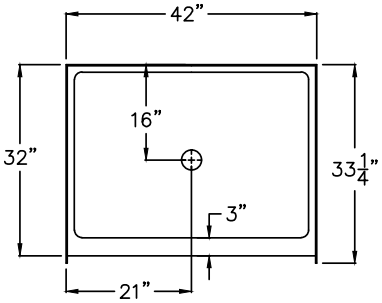

FRONT VIEW

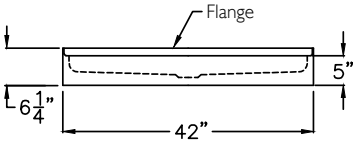

SIDE VIEW

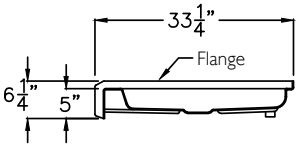

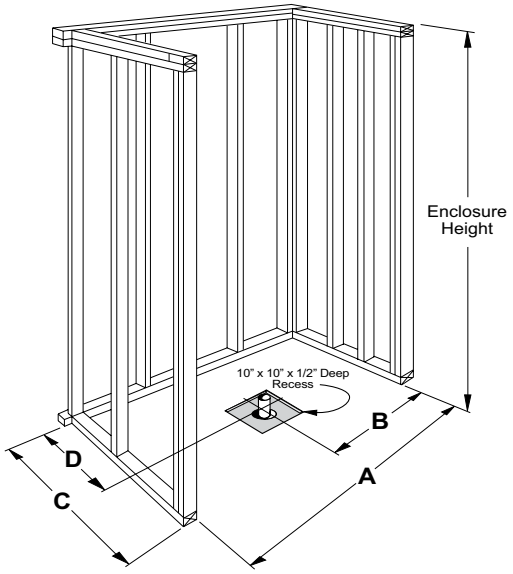

CENTER DRAIN	A	B	C	D
G 4232 SH PAN	42 1/4"	21 1/8"	331/4"	16"

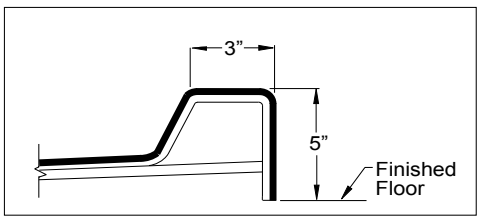

5" EasyStep™

upgrade to **SOLID SURFACE**

Solid Surface is available as an upgrade to standard gelcoat and has a 10 year warranty.

white | biscuit | bone

colton seed | ashley | almond granite | beach | dune | mink | violet | coco

Due to the nature of the materials, dimensions may vary +/- 0.5". For most up-to-date product information, visit praxiscompanies.com.